شركة الخليج للكابلات والصناعات المتعددة - الأردن
Gulf Cable & Multi Industries Co. Jordan

شركة الخليج للكابلات والصناعات الكهربائية ش.م.ك.ع. - الكويت
Gulf Cable & Electrical Industries Co. K.S.C.P. - Kuwait

We Build Cables For Life

MEDIUM VOLTAGE CABLES

PRODUCT DATA TABLES

WWW.GULFCABLE.COM

KUWAIT | Sulaibiya industrial zone Area 1, street No.5,
Tel: +965 - 24645500 - Fax: +965 - 24675305 - 24675850
P.O.Box: 1196 Safat 13012 Kuwait
E-mail: info@gulfcable.com

JORDAN | Amman - Mecca st.-Al-Husseini Complex No. 152
Tel: +962 65524144 / 143 - Fax: +962 65524145
P.O.Box: 17938 Amman 11195 Jordan
E-mail: infojo@gulfcable.com

SYSTEM CERTIFICATION ISO 9001 SGS

BASEC ISO 9001 UKAS MANAGEMENT SYSTEMS 0004 CERTIFICATE NO: CS1-212

TÜV NORD TÜV Middle East ISO 9001 ISO 14001 BS OHSAS 18001

www.gulfcable.com
EDITION 08 / 2019

NOTES

CONTENTS

- **Introduction** 1
- **Product Range** 2

Product Data Tables

- **XLPE Insulated Medium Voltage Cables**

Single Core Cables 3.8/6.6 KV Cu/SC/XLPE/SC/AWA/PVC 3
Single Core Cables 3.8/6.6 KV Cu/SC/XLPE/SC/CuT/PVC/AWA/PVC 4
Three Core Cables 3.8/6.6 KV Cu/SC/XLPE/SC/SWA/PVC 5
Three Core Cables 3.8/6.6 KV Cu/SC/XLPE/SC/CuT/PVC/SWA/PVC 6
Single Core Cables 6.35/11 KV Cu/SC/XLPE/SC/AWA/PVC 7
Single Core Cables 6.35/11 KV Cu/SC/XLPE/SC/CuT/PVC/AWA/PVC 8
Three Core Cables 6.35/11 KV Cu/SC/XLPE/SC/SWA/PVC 9
Three Core Cables 6.35/11 KV Cu/SC/XLPE/SC/CuT/PVC/SWA/PVC 10
Three Core Cables 6.35/11 KV AL/SC/XLPE/SC/SWA/PVC 11
Three Core Cables 6.35/11 KV AL/SC/XLPE/SC/CuT/PVC/SWA/PVC 12
Single Core Cables 8.7/15 KV Cu/SC/XLPE/SC/AWA/PVC 13
Single Core Cables 8.7/15 KV Cu/SC/XLPE/SC/CuT/PVC 14
Single Core Cables 8.7/15 KV Cu/SC/XLPE/SC/CuT/PVC/AWA/PVC 15
Three Core Cables 8.7/15 KV Cu/SC/XLPE/SC/CuT/PVC 16
Three Core Cables 8.7/15 KV Cu/SC/XLPE/SC/CuT/PVC/SWA/PVC 17
Three Core Cables 8.7/15 KV AL/SC/XLPE/SC/CuT/PVC/SWA/PVC 18
Single Core Cables 12.7/22 KV Cu/SC/XLPE/SC/CuT/PVC 19
Three Core Cables 12.7/22 KV Cu/SC/XLPE/SC/CuT/PVC 20
Three Core Cables 12.7/22 KV Cu/SC/XLPE/SC/CuT/PVC/SWA/PVC 21

CONTENTS

Three Core Cables 12.7/22 KV AL/SC/XLPE/SC/CuT/PVC/SWA/PVC 22
Single Core Cables 19/33 KV Cu/SC/XLPE/SC/CuT/PVC/AWA/PVC 23
Three Core Cables 19/33 KV Cu/SC/XLPE/SC/CuT/PVC/SWA/PVC 24
Three Core Cables 19/33 KV AL/SC/XLPE/SC/CuT/PVC/SWA/PVC 25

AUXILIARY CABLES

Pilot Cables - 16 and 34 Core Cables 26

Technical Data Tables

AC Resistance, Reactance and Capacitance Values

3.8/6.6 KV Cables 27
6.35/11 KV Cables 28
8.7/15 KV Cables 29
12.7/22 KV Cables 30
19/33 KV Cables 31

Current Ratings

3.8/6.6 to 19/33 KV XLPE Single Core Insulated Cables 32
3.8/6.6 to 19/33 KV XLPE Three Core Insulated Cables 33
Rating Factors 34-41

Short Circuit Curves

Copper Conductor XLPE Insulated Cables 42
Aluminium Conductor XLPE Insulated Cables 43

Drums

Drum sizes and dimensions 44

MEDIUM VOLTAGE CABLES

We Build Cables For Life

Introduction:

Gulf Cables and Electrical Industries Co. K.S.C.P. was established in 1975 with objective of meeting growing local and export markets requirements, it owns two factories one located in kuwait the other in jordan. our vision is to be the leader of gulf and middle east region in manufacturing and supplying Cables and Conductors. Through continuous improvements driven by the integrity, teamwork and innovation, we are committed to provide such a quality that:

- Our customers will receive superior value
- Our shareholders will receive ever exceeding returns on their investments
- Our business partners will share our success
- Our employees will prosper

Our products are designed and manufactured to meet the needs of the Local, Regional and International Markets. All our products meet the respective world standards.
we handle all available means for exporting products - land, marine and air.
we are also equipped to meet all export requirements and formalities in the local arab markets, including Saudi Arabia, United Arab Emirates, Oman, Bahrain, Jordan , Iraq and MENA. opportunities to export to Syria, Lebanon, Yemen and other countries worldwide will also be available soon.
We have developed and established communication channels with our customers through which, we constantly get updates and feedbacks on their stated / implied needs and problems. Based on this information, we have devised new modalities to provide better service to our valued customers. Thus, we not only provide Quality products, but also offer a host of related services before and after the sale.

Products:

Medium Voltage Power Cables up to 19/33(36) KV
Low Voltage Power Cables up to 600/1000V
Control Cables 600/1000V
Bare conductors for Overhead Lines
Earthing Conductors
PVC or XLPE Insulated Conductors
Domestic applications / internal wiring
LSF Cables & Wires
Lead Sheathed Cables
Enamelled Wires
Telephone, Communication & Instrumentation Cables

Quality:

Quality has always been our top priority and to meet customer's expectation has been our prime objective; the very basis on which we earned the confidence of our clientele. It is this concern and commitment, rather than just sell of product, has given us a distinct image and competitive advantage.

Certificates:

ISO 9001: 2015
ISO 14001: 2015
BS OHSAS 18001:2007
} CERTIFIED BY TUV NORD
BS EN ISO 9001:2015 CERTIFIED BY BASEC
ISO 9001:2015 CERTIFIED BY SGS

Product Range

We at Gulf Cables always aim for the best. While most of the Cable Manufacturers in Gulf and Middle East region settled for ISO 9002, we stand out with ISO 9001 which recognizes our ability for design & development as well.

As a philosophy, our commitment to Customers does not end with a sale. we also offer a host of related services before and after the sale. These include,

- Application engineering service for selection of appropriate product best suiting the end use.
- An extensive range of Cables, single core wires, flexible cords bare & Insulated Conductors Manufactured to stringent Quality standards going beyond international specifications.
- Design and Development of products tailored to meet specific requirements of the application.
- To help the customers understand the product intricacies and its performance levels.

Note 1:

THE TABULATIONS ON SUBSEQUENT PAGES FURNISH OVERALL DIMENSIONS, NET & GROSS WEIGHTS AND DRUM DIMENSIONS. PLEASE NOTE THAT THESE ARE "APPROXIMATE" VALUES. THEY HAVE BEEN FURNISHED FOR GENERAL GUIDELINES AND INTENDED TO BE USED FOR THUMB RULE ESTIMATIONS / FREIGHT CALCULATIONS.

Note 2:

VOLTAGE RATING:

TWO DISTINCT SYSTEMS OF VOLTAGE DESIGNATION ARE GENERALLY IN USE. EQUIVALENCE BETWEEN THESE TWO SYSTEMS. BASED ON INSULATION THICKNESS AND MAXIMUM VALUE OF HIGHEST SYSTEM VOLTAGE IS AS TABULATED BELOW:

IEC DESIGNATION Uo/U (Um)	BS DESIGNATION Uo/U (Um)
3.6 / 6 (7.2) KV	3.8 / 6.6 (7.2) KV
6 / 10 (12) KV	6.35 / 11 (12) KV
8.7 / 15 (17.5) KV	8.7 / 15 (17.5) KV
12 / 20 (24) KV	12.7 / 22 (24) KV
18 / 30 (36) KV	19 / 33 (36) KV

WHERE,

- Uo IS RATED POWER FREQUENCY VOLTAGE BETWEEN CONDUCTOR AND EARTH OR METALLIC SCREEN, FOR WHICH THE CABLE IS DESIGNED.
- U IS THE RATED POWER FREQUENCY VOLTAGE BETWEEN CONDUCTORS, FOR WHICH THE CABLE IS DESIGNED.
- Um IS THE MAXIMUM VALUE OF "HIGHEST SYSTEM VOLTAGE" FOR WHICH THE EQUIPMENT MAY BE USED.

FROM ABOVE TABULATION, EQUIVALENT IEC / BS DESIGNATION CAN BE DETERMINED FOR ANY SYSTEM AS APPROPRIATE.

Note 3:

THE FOLLOWING LIST TABULATES ONLY THE "STANDARD" PRODUCTS. FOR ANY PRODUCT NOT LISTED BELOW, PLEASE DO NOT HESITATE TO CONTACT OUR SALES & MARKETTING DIVISION. WE SHALL BE TOO PLEASED TO MEET YOUR SPECIFIC REQUIREMENTS.

Product	Standard
Medium Voltage Power Cables up to 30 KV • XLPE insulated, single core or multicore armoured or unarmoured cables	IEC 60502 / BS 6622
Auxiliary Cables • 16 core or 34 core pilot cables to be used along with underground powerlines 11 KV, 132 KV and beyond	MEW / ESI Standards

- 3.8 / 6.6 KV - SINGLE CORE
  (HIGHEST SYSTEM VOLTAGE - 7.2 KV)

  COPPER CONDUCTOR XLPE INSULATED
  ALUMINIUM WIRE ARMOURED
  PVC SHEATHED CABLES

  (CU / SC / XLPE / SC / AWA / PVC)

Nominal Area of Conductor	Maximum Conductor Resistance at 20°C	Thickness of XLPE Insulation	Thickness of (Semiconducting) Tape	Dia of Armour Wire	Thickness of Outer Sheath	Approx. Overall Diameter	Approx. Cable Weight	Standard Packing Length	Drum Size	Approx. Gross Weight
Sqmm	Ohm/Km	mm	mm	mm	mm	mm	Kg/Km	Metre±10%		KG
35	0.524	2.5	0.4	1.6	1.8	23.9	860	500	D-11	530
50	0.387	2.5	0.4	1.6	1.8	25.0	1010	500	D-12	615
70	0.268	2.5	0.4	1.6	1.8	26.6	1250	500	D-12	735
95	0.193	2.5	0.4	1.6	1.8	28.5	1560	500	D-12	890
120	0.153	2.5	0.4	1.6	1.9	30.2	1840	500	D-14	1070
150	0.124	2.5	0.4	1.6	1.9	31.6	2160	500	D-14	1230
185	0.0991	2.5	0.4	1.6	2.0	33.4	2530	500	D-16	1480
240	0.0754	2.6	0.4	2.0	2.1	37.1	3240	500	D-18	1860
300	0.0601	2.8	0.4	2.0	2.2	39.7	3900	500	D-18	2190
400	0.0470	3.0	0.4	2.0	2.3	43.2	4870	500	D-18	2680
500	0.0366	3.2	0.4	2.5	2.4	47.8	6110	500	D-19	3380
630	0.0283	3.2	0.4	2.5	2.5	51.8	7520	500	D-19	4080

All conductors circular compacted.
Equivalent voltage designation as per IEC: 60502 - 2 : 3.6/6 KV.
Cables conform to IEC 60502 - 2.

MEDIUM VOLTAGE CABLES

- 3.8 / 6.6 KV - SINGLE CORE
  (HIGHEST SYSTEM VOLTAGE - 7. 2 KV)

  COPPER CONDUCTOR XLPE INSULATED
  COPPER TAPE SCREENED
  ALUMINIUM WIRE ARMOURED
  PVC SHEATHED CABLES

  (CU / SC / XLPE / SC / CUT / PVC / AWA / PVC)

Nominal Area of Conductor	Maximum Conductor Resistance at 20°C	Thickness of XLPE Insulation	Thickness of Copper Tape	Thickness of Extruded Bedding	Dia of Armour Wire	Thickness of Outer Sheath	Approx. Overall Diameter	Approx. Cable Weight	Standard Packing Length	Drum Size	Approx. Gross Weight
Sqmm	Ohm/Km	mm	mm	mm	mm	mm	mm	Kg/Km	Metre±10%		KG
35	0.524	2.5	0.075	1.2	1.6	1.8	25.5	1020	500	D-12	620
50	0.387	2.5	0.075	1.2	1.6	1.8	26.6	1180	500	D-12	700
70	0.268	2.5	0.075	1.2	1.6	1.8	28.2	1440	500	D-12	830
95	0.193	2.5	0.075	1.2	1.6	1.9	30.3	1760	500	D-14	1030
120	0.153	2.5	0.075	1.2	1.6	1.9	31.8	2050	500	D-14	1175
150	0.124	2.5	0.075	1.2	1.6	2.0	33.4	2380	500	D-14	1340
185	0.0991	2.5	0.075	1.2	2.0	2.0	35.8	2840	500	D-16	1630
240	0.0754	2.6	0.075	1.2	2.0	2.1	38.7	3490	500	D-18	1985
300	0.0601	2.8	0.075	1.2	2.0	2.2	41.3	4180	500	D-18	2330
400	0.0470	3.0	0.075	1.2	2.0	2.3	44.8	5160	500	D-18	2820
500	0.0366	3.2	0.075	1.3	2.5	2.5	49.8	6490	500	D-19	3565
630	0.0283	3.2	0.075	1.4	2.5	2.6	54.0	8020	500	D-21	4430

All conductors circular compacted.
Equivalent voltage designation as per IEC 60502 - 2 : 3.6/6.0 KV.
Cables conform to IEC 60502 - 2.

- 3.8 / 6.6 KV - THREE CORE
  (HIGHEST SYSTEM VOLTAGE - 7.2 KV)

  COPPER CONDUCTOR XLPE INSULATED
  STEEL WIRE ARMOURED
  PVC SHEATHED CABLES

  (CU / SC / XLPE / SC / SWA / PVC)

Nominal Area of Conductor	Maximum Conductor Resistance at 20°C	Thickness of XLPE Insulation	Thickness of (Semiconducting) Tape	Dia of Armour Wire	Thickness of Outer Sheath	Approx. Overall Diameter	Approx. Cable Weight	Standard Packing Length	Drum Size	Approx. Gross Weight
Sqmm	Ohm/Km	mm	mm	mm	mm	mm	Kg/Km	Metre±10%		KG
35	0.524	2.5	0.4	2.0	2.3	43.9	3310	500	D-18	1900
50	0.387	2.5	0.4	2.5	2.4	47.5	4230	500	D-19	2440
70	0.268	2.5	0.6	2.5	2.5	51.1	5100	500	D-19	2870
95	0.193	2.5	0.6	2.5	2.7	56.2	6260	500	D-21	3550
120	0.153	2.5	0.6	2.5	2.8	59.7	7240	500	D-22	4090
150	0.124	2.5	0.6	2.5	2.9	62.9	8310	250	D-18	2320
185	0.0991	2.5	0.6	2.5	3.0	66.6	9570	250	D-18	2630
240	0.0754	2.6	0.6	2.5	3.2	72.8	11650	250	D-21	3330
300	0.0601	2.8	0.6	3.15	3.4	79.7	14740	250	D-23	4190
400	0.0470	3.0	0.6	3.15	3.7	87.4	18020	250	D-23	5010

All conductors circular compacted.
Equivalent voltage designation as per IEC 60502 - 2 : 3.6/6 KV.
Cables conform to IEC 60502 - 2.

MEDIUM VOLTAGE CABLES

- 3.8 / 6.6 KV - THREE CORE
  (HIGHEST SYSTEM VOLTAGE - 7.2 KV)

  COPPER CONDUCTOR XLPE INSULATED
  COPPER TAPE SCREENED
  STEEL WIRE ARMOURED
  PVC SHEATHED CABLES

  (CU / SC / XLPE / SC / CUT / PVC / SWA / PVC)

Nominal Area of Conductor	Maximum Conductor Resistance at 20°C	Thickness of XLPE Insulation	Thickness of Copper Tape	Thickness of Extruded Bedding	Dia of Armour Wire	Thickness of Outer Sheath	Approx. Overall Diameter	Approx. Cable Weight	Standard Packing Length	Drum Size	Approx. Gross Weight
Sqmm	Ohm/Km	mm	mm	mm	mm	mm	mm	Kg/Km	Metre±10%		KG
35	0.524	2.5	0.075	1.2	2.0	2.3	46.2	3820	500	D-18	2150
50	0.387	2.5	0.075	1.3	2.5	2.5	50.2	4830	500	D-19	2735
70	0.268	2.5	0.075	1.4	2.5	2.6	54.1	5770	500	D-21	3305
95	0.193	2.5	0.075	1.4	2.5	2.7	58.4	6910	500	D-22	3925
120	0.153	2.5	0.075	1.5	2.5	2.8	62.0	7950	500	D-23	4475
150	0.124	2.5	0.075	1.5	2.5	2.9	65.2	9050	500	D-23	5025
185	0.0991	2.5	0.075	1.6	2.5	3.0	69.1	10380	250	D-21	3015
240	0.0754	2.6	0.075	1.7	2.5	3.2	75.5	12600	250	D-21	3570
300	0.0601	2.8	0.075	1.8	3.15	3.5	82.8	15870	250	D-23	4470
400	0.0470	3.0	0.075	2.0	3.15	3.8	90.9	19350	250	D-23	5340

All conductors circular compacted.
Equivalent voltage designation as per IEC 60502 - 2 : 3.6/6.0 KV.
Cables conform to IEC 60502 - 2.

- 6.35 / 11 KV - SINGLE CORE
  (HIGHEST SYSTEM VOLTAGE -12 KV)

  COPPER CONDUCTOR XLPE INSULATED
  ALUMINIUM WIRE ARMOURED
  PVC SHEATHED CABLES

  (CU / SC / XLPE / SC / AWA / PVC)

Nominal Area of Conductor	Maximum Conductor Resistance at 20°C	Thickness of XLPE Insulation	Thickness of Bedding (Semiconducting) Tape	Dia of Armour Wire	Thickness of Outer Sheath	Approx. Overall Diameter	Approx. Cable Weight	Standard Packing Length	Drum Size	Approx. Gross Weight
Sqmm	Ohm/Km	mm	mm	mm	mm	mm	Kg/Km	Metre±10%		KG
35	0.524	3.4	0.4	1.6	1.8	26.0	950	500	D-12	585
50	0.387	3.4	0.4	1.6	1.8	27.0	1110	500	D-12	660
70	0.268	3.4	0.4	1.6	1.8	28.0	1340	500	D-12	780
95	0.193	3.4	0.4	1.6	1.9	30.5	1670	500	D-14	985
120	0.153	3.4	0.4	1.6	1.9	32.0	1940	500	D-14	1120
150	0.124	3.4	0.4	1.6	2.0	33.6	2280	500	D-16	1350
185	0.0991	3.4	0.4	2.0	2.0	36.0	2730	500	D-18	1600
240	0.0754	3.4	0.4	2.0	2.1	39.0	3340	500	D-18	1910
300	0.0601	3.4	0.4	2.0	2.2	40.9	3990	500	D-18	2240
400	0.0470	3.4	0.4	2.0	2.3	44.0	4930	500	D-18	2710
500	0.0366	3.4	0.4	2.5	2.4	48.2	6150	500	D-19	3390
630	0.0283	3.4	0.4	2.5	2.5	52.2	7560	500	D-19	4100

All conductors circular compacted.
Equivalent voltage designation as per IEC: 60502 - 2 : 6/10 KV.
Cables conform to IEC 60502 - 2.

MEDIUM VOLTAGE CABLES

- 6.35 / 11 KV - SINGLE CORE
  (HIGHEST SYSTEM VOLTAGE -12 KV)

  COPPER CONDUCTOR XLPE INSULATED
  COPPER TAPE SCREENED
  ALUMINIUM WIRE ARMOURED
  PVC SHEATHED CABLES

  (CU / SC / XLPE / SC / CUT / PVC / AWA / PVC)

Nominal Area of Conductor	Maximum Conductor Resistance at 20°C	Thickness of XLPE Insulation	Thickness of Copper Tape	Thickness of Extruded Bedding	Dia of Armour Wire	Thickness of Outer Sheath	Approx. Overall Diameter	Approx. Cable Weight	Standard Packing Length	Drum Size	Approx. Gross Weight
Sqmm	Ohm/Km	mm	mm	mm	mm	mm	mm	Kg/Km	Metre±10%		KG
35	0.524	3.4	0.075	1.2	1.6	1.8	27.3	1130	500	D-12	675
50	0.387	3.4	0.075	1.2	1.6	1.8	28.4	1290	500	D-12	755
70	0.268	3.4	0.075	1.2	1.6	1.9	30.2	1560	500	D-14	930
95	0.193	3.4	0.075	1.2	1.6	1.9	32.1	1880	500	D-16	1150
120	0.153	3.4	0.075	1.2	1.6	2.0	33.8	2190	500	D-16	1330
150	0.124	3.4	0.075	1.2	2.0	2.1	36.2	2620	500	D-18	1550
185	0.0991	3.4	0.075	1.2	2.0	2.1	37.8	3000	500	D-18	1740
240	0.0754	3.4	0.075	1.2	2.0	2.2	40.5	3640	500	D-18	2060
300	0.0601	3.4	0.075	1.2	2.0	2.2	42.5	4290	500	D-18	2390
400	0.0470	3.4	0.075	1.2	2.0	2.4	45.8	5270	500	D-19	2960
500	0.0366	3.4	0.075	1.3	2.5	2.5	50.2	6550	500	D-19	3600
630	0.0283	3.4	0.075	1.4	2.5	2.6	54.4	8020	500	D-21	4430

All conductors circular compacted.
Equivalent voltage designation as per IEC 60502 - 2 : 6/10 KV.
Cables conform to IEC 60502 - 2.

- 6.35 / 11 KV - THREE CORE
  (HIGHEST SYSTEM VOLTAGE - 12 KV)

  COPPER CONDUCTOR XLPE INSULATED
  STEEL WIRE ARMOURED
  PVC SHEATHED CABLES

  (CU / SC / XLPE / SC / SWA / PVC)

Nominal Area of Conductor	Maximum Conductor Resistance at 20°C	Thickness of XLPE Insulation	Thickness of (Semiconducting) Tape	Dia of Armour Wire	Thickness of Outer Sheath	Approx. Overall Diameter	Approx. Cable Weight	Standard Packing Length	Drum Size	Approx. Gross Weight
Sqmm	Ohm/Km	mm	mm	mm	mm	mm	Kg/Km	Metre±10%		KG
35	0.524	3.4	0.4	2.5	2.4	49.0	4060	500	D-19	2350
50	0.387	3.4	0.4	2.5	2.5	51.6	4640	500	D-19	2640
70	0.268	3.4	0.6	2.5	2.7	56.0	5630	500	D-21	3240
95	0.193	3.4	0.6	2.5	2.8	60.3	6720	500	D-22	3830
120	0.153	3.4	0.6	2.5	2.9	63.8	7720	250	D-18	2170
150	0.124	3.4	0.6	2.5	3.0	67.0	8800	250	D-18	2440
185	0.0991	3.4	0.6	2.5	3.1	70.7	10080	250	D-21	2940
240	0.0754	3.4	0.6	3.15	3.3	77.9	12960	250	D-21	3660
300	0.0601	3.4	0.6	3.15	3.5	82.5	15150	250	D-23	4290
400	0.0470	3.4	0.6	3.15	3.7	89.1	18270	250	D-23	5070

All conductors circular compacted.
Equivalent voltage designation as per IEC 60502 - 2 : 6/10 KV
Cables conform to IEC :60502 - 2.

MEDIUM VOLTAGE CABLES

- 6.35 / 11 KV - THREE CORE
  (HIGHEST SYSTEM VOLTAGE -12 KV)

  COPPER CONDUCTOR XLPE INSULATED
  COPPER TAPE SCREENED
  STEEL WIRE ARMOURED
  PVC SHEATHED CABLES

  (CU / SC / XLPE / SC / CUT / PVC / SWA / PVC)

Nominal Area of Conductor	Maximum Conductor Resistance at 20°C	Thickness of XLPE Insulation	Thickness of Copper Tape	Thickness of Extruded Bedding	Dia of Armour Wire	Thickness of Outer Sheath	Approx. Overall Diameter	Approx. Cable Weight	Standard Packing Length	Drum Size	Approx. Gross Weight
Sqmm	Ohm/Km	mm	mm	mm	mm	mm	mm	Kg/Km	Metre±10%		KG
35	0.524	3.4	0.075	1.3	2.5	2.5	52.0	4700	500	D-19	2670
50	0.387	3.4	0.075	1.4	2.5	2.6	54.8	5300	500	D-21	3070
70	0.268	3.4	0.075	1.4	2.5	2.7	58.5	6240	500	D-22	3590
95	0.193	3.4	0.075	1.5	2.5	2.9	63.2	7460	500	D-23	4230
120	0.153	3.4	0.075	1.6	2.5	3.0	66.8	8530	500	D-23	4770
150	0.124	3.4	0.075	1.6	2.5	3.1	70.0	9650	500	D-23	5330
185	0.0991	3.4	0.075	1.7	2.5	3.2	73.9	11040	250	D-21	3180
240	0.0754	3.4	0.075	1.8	3.15	3.4	81.2	14060	250	D-23	4020
300	0.0601	3.4	0.075	1.9	3.15	3.6	86.1	16340	250	D-23	4590
400	0.0470	3.4	0.075	2.0	3.15	3.8	93.0	19610	250	D-23	5400

All conductors circular compacted.
Equivalent voltage designation as per IEC 60502 - 2 : 6/10 KV.
Cables conform to IEC 60502 - 2.

- 6.35 / 11 KV -THREE CORE
  (HIGHEST SYSTEM VOLTAGE - 12 KV)

  ALUMINIUM CONDUCTOR XLPE INSULATED
  STEEL WIRE ARMOURED
  PVC SHEATHED CABLES

  (AL / SC / XLPE / SC / SWA / PVC)

Nominal Area of Conductor	Maximum Conductor Resistance at 20°C	Thickness of XLPE Insulation	Thickness of Bedding (Semiconducting) Tape	Dia of Armour Wire	Thickness of Outer Sheath	Approx. Overall Diameter	Approx. Cable Weight	Standard Packing Length	Drum Size	Approx. Gross Weight
Sqmm	Ohm/Km	mm	mm	mm	mm	mm	Kg/Km	Metre±10%		KG
35	0.868	3.4	0.4	2.5	2.4	49.0	3440	500	D-19	2040
50	0.641	3.4	0.4	2.5	2.5	51.6	3790	500	D-19	2220
70	0.443	3.4	0.6	2.5	2.7	56.5	4430	500	D-21	2640
95	0.320	3.4	0.6	2.5	2.8	60.6	5050	500	D-22	3000
120	0.253	3.4	0.6	2.5	2.9	63.8	5550	500	D-23	3280
150	0.206	3.4	0.6	2.5	3.0	67.0	6070	500	D-23	3540
185	0.164	3.4	0.6	2.5	3.1	70.9	6740	250	D-21	2110
240	0.125	3.4	0.6	3.15	3.3	78.0	8590	250	D-21	2570
300	0.100	3.4	0.6	3.15	3.5	82.5	9640	250	D-23	2910
400	0.0778	3.4	0.6	3.15	3.7	89.6	11160	250	D-23	3290

All conductors circular compacted.
Equivalent voltage designation as per IEC 60502 - 2 : 6/10 KV.
Cables conform to IEC 60502 - 2.

MEDIUM VOLTAGE CABLES

- 6.35 / 11 KV - THREE CORE
  (HIGHEST SYSTEM VOLTAGE - 12 KV)

  ALUMINIUM CONDUCTOR XLPE INSULATED
  COPPER TAPE SCREENED
  STEEL WIRE ARMOURED
  PVC SHEATHED CABLES

  (AL / SC / XLPE / SC / CUT / PVC / SWA / PVC)

Nominal Area of Conductor	Maximum Conductor Resistance at 20°C	Thickness of XLPE Insulation	Thickness of Copper Tape	Thickness of Extruded Bedding	Dia of Armour Wire	Thickness of Outer Sheath	Approx. Overall Diameter	Approx. Cable Weight	Standard Packing Length	Drum Size	Approx. Gross Weight
Sqmm	Ohm/Km	mm	mm	mm	mm	mm	mm	Kg/Km	Metre±10%		KG
35	0.868	3.4	0.075	1.3	2.5	2.5	52.0	4090	500	D-19	2370
50	0.641	3.4	0.075	1.4	2.5	2.6	54.8	4450	500	D-21	2650
70	0.443	3.4	0.075	1.4	2.5	2.7	58.9	5080	500	D-22	3010
95	0.320	3.4	0.075	1.5	2.5	2.9	63.4	5750	500	D-23	3380
120	0.253	3.4	0.075	1.6	2.5	3.0	66.8	6350	500	D-23	3680
150	0.206	3.4	0.075	1.6	2.5	3.1	70.0	6920	500	D-23	3960
185	0.164	3.4	0.075	1.7	2.5	3.2	74.1	7700	500	D-23	4350
240	0.125	3.4	0.075	1.8	3.15	3.4	81.4	9690	500	D-24	5450
300	0.100	3.4	0.075	1.9	3.15	3.6	86.1	10830	500	D-25-S	6170
400	0.0778	3.4	0.075	2.0	3.15	3.8	93.4	12500	250	D-23	3630

All conductors circular compacted.
Equivalent voltage designation as per IEC 60502 - 2 : 6/10 KV.
Cables conform to IEC 60502 - 2.

- 8.7 / 15 KV - SINGLE CORE
  (HIGHEST SYSTEM VOLTAGE - 17.5 KV)

  COPPER CONDUCTOR XLPE INSULATED
  ALUMINIUM WIRE ARMOURED
  PVC SHEATHED CABLES

  (CU / SC / XLPE / SC / AWA / PVC)

Nominal Area of Conductor	Maximum Conductor Resistance at 20°C	Thickness of XLPE Insulation	Thickness of Bedding (Semiconducting) Tape	Dia of Armour Wire	Thickness of Outer Sheath	Approx. Overall Diameter	Approx. Cable Weight	Standard Packing Length	Drum Size	Approx. Gross Weight
Sqmm	Ohm/Km	mm	mm	mm	mm	mm	Kg/Km	Metre±10%		KG
35	0.524	4.5	0.4	1.6	1.8	27.9	1050	500	D-12	635
50	0.387	4.5	0.4	1.6	1.8	29.0	1210	500	D-12	715
70	0.268	4.5	0.4	1.6	1.9	30.8	1470	500	D-14	885
95	0.193	4.5	0.4	1.6	1.9	32.7	1780	500	D-16	1100
120	0.153	4.5	0.4	2.0	2.0	35.2	2170	500	D-18	1330
150	0.124	4.5	0.4	2.0	2.1	36.8	2510	500	D-18	1500
185	0.0991	4.5	0.4	2.0	2.1	38.4	2890	500	D-18	1680
240	0.0754	4.5	0.4	2.0	2.2	41.1	3510	500	D-18	2000
300	0.0601	4.5	0.4	2.0	2.3	43.3	4170	500	D-18	2330
400	0.0470	4.5	0.4	2.5	2.4	47.4	5240	500	D-19	2950
500	0.0366	4.5	0.4	2.5	2.5	50.6	6350	500	D-19	3500
630	0.0283	4.5	0.4	2.5	2.6	54.6	7780	500	D-21	4310

All conductors circular compacted.
Cables conform to IEC 60502 - 2.

MEDIUM VOLTAGE CABLES

- 8.7 / 15 KV - SINGLE CORE
  (HIGHEST SYSTEM VOLTAGE - 17.5 KV)

  COPPER CONDUCTOR XLPE INSULATED
  COPPER TAPE SCREENED
  PVC SHEATHED CABLES

  (CU / SC / XLPE / SC / CUT / PVC)

Nominal Area of Conductor	Maximum Conductor Resistance at 20°C	Thickness of XLPE Insulation	Thickness of Copper Tape	Thickness of Outer Sheath	Approx. Overall Diameter	Approx Cable Weight	Standard Packing Length	Drum Size	Approx. Gross Weight
Sqmm	Ohm/Km	mm	mm	mm	mm	Kg/Km	Metre±10%		KG
35	0.524	4.5	0.075	1.8	23.7	835	500	D-12	520
50	0.387	4.5	0.075	1.8	24.8	980	500	D-12	600
70	0.268	4.5	0.075	1.8	26.4	1220	500	D-12	720
95	0.193	4.5	0.075	1.8	28.3	1520	500	D-12	870
120	0.153	4.5	0.075	1.9	30.0	1800	500	D-12	1010
150	0.124	4.5	0.075	1.9	31.4	2110	500	D-14	1210
185	0.0991	4.5	0.075	2.0	33.2	2480	500	D-16	1450
240	0.0754	4.5	0.075	2.0	35.7	3070	500	D-18	1780
300	0.0601	4.5	0.075	2.1	37.9	3700	500	D-18	2090
400	0.0470	4.5	0.075	2.2	41.0	4620	500	D-18	2550
500	0.0366	4.5	0.075	2.3	44.2	5660	500	D-18	3070
630	0.0283	4.5	0.075	2.4	48.2	7040	500	D-19	3840

All conductors circular compacted.
Cables conform to IEC 60502 - 2.

- 8.7 / 15 KV - SINGLE CORE
  (HIGHEST SYSTEM VOLTAGE - 17.5 KV)

  COPPER CONDUCTOR XLPE INSULATED
  COPPER TAPE SCREENED
  ALUMINIUM WIRE ARMOURED
  PVC SHEATHED CABLES

  (CU / SC / XLPE / SC / CUT / PVC / AWA / PVC)

Nominal Area of Conductor	Maximum Conductor Resistance at 20°C	Thickness of XLPE Insulation	Thickness of Copper Tape	Thickness of Extruded Bedding	Dia of Armour Wire	Thickness of Outer Sheath	Approx. Overall Diameter	Approx. Cable Weight	Standard Packing Length	Drum Size	Approx. Gross Weight
Sqmm	Ohm/Km	mm	mm	mm	mm	mm	mm	Kg/Km	Metre±10%		KG
35	0.524	4.5	0.075	1.2	1.6	1.9	29.7	1270	500	D-12	745
50	0.387	4.5	0.075	1.2	1.6	1.9	30.8	1430	500	D-14	865
70	0.268	4.5	0.075	1.2	1.6	1.9	32.4	1700	500	D-16	1060
95	0.193	4.5	0.075	1.2	2.0	2.0	35.3	2130	500	D-18	1310
120	0.153	4.5	0.075	1.2	2.0	2.1	37.0	2440	500	D-18	1460
150	0.124	4.5	0.075	1.2	2.0	2.1	38.4	2780	500	D-18	1630
185	0.0991	4.5	0.075	1.2	2.0	2.2	40.2	3180	500	D-18	1830
240	0.0754	4.5	0.075	1.2	2.0	2.3	42.9	3840	500	D-18	2160
300	0.0601	4.5	0.075	1.2	2.0	2.3	44.9	4490	500	D-18	2490
400	0.0470	4.5	0.075	1.3	2.5	2.5	49.4	5660	500	D-19	3150
500	0.0366	4.5	0.075	1.3	2.5	2.6	52.6	6770	500	D-19	3710
630	0.0283	4.5	0.075	1.4	2.5	2.7	56.8	8280	500	D-21	4560

All conductors circular compacted.
Cables conform to IEC 60502 - 2.

MEDIUM VOLTAGE CABLES

- 8.7 / 15 KV - THREE CORE
  (HIGHEST SYSTEM VOLTAGE - 17.5 KV)

  COPPER CONDUCTOR XLPE INSULATED
  COPPER TAPE SCREENED
  PVC SHEATHED CABLES

  (CU / SC / XLPE / SC / CUT / PVC)

Nominal Area of Conductor	Maximum Conductor Resistance at 20°C	Thickness of XLPE Insulation	Thickness of Copper Tape	Thickness of Outer Sheath	Approx. Overall Diameter	Approx. Cable Weight	Standard Packing Length	Drum Size	Approx. Gross Weight
Sqmm	Ohm/Km	mm	mm	mm	mm	Kg/Km	Metre±10%		KG
35	0.524	4.5	0.075	2.5	49.4	2760	500	D-19	1700
50	0.387	4.5	0.075	2.6	52.0	3250	500	D-19	1950
70	0.268	4.5	0.075	2.7	55.6	4030	500	D-21	2440
95	0.193	4.5	0.075	2.8	59.9	5000	500	D-22	2970
120	0.153	4.5	0.075	2.9	63.4	5880	500	D-23	3440
150	0.124	4.5	0.075	3.0	66.6	6880	500	D-23	3940
185	0.0991	4.5	0.075	3.1	70.2	8030	500	D-23	4520
240	0.0754	4.5	0.075	3.3	76.0	9930	500	D-23	5470
300	0.0601	4.5	0.075	3.4	80.6	11890	500	D-23	6450
400	0.0470	4.5	0.075	3.7	87.4	14800	250	D-23	4200

All conductors circular compacted.
Cables conform to IEC 60502 - 2.

- 8.7 / 15 KV - THREE CORE
  (HIGHEST SYSTEM VOLTAGE - 17.5 KV)

  COPPER CONDUCTOR XLPE INSULATED
  COPPER TAPE SCREENED
  STEEL WIRE ARMOURED
  PVC SHEATHED CABLES

  (CU / SC / XLPE / SC / CUT / PVC / SWA / PVC)

Nominal Area of Conductor	Maximum Conductor Resistance at 20°C	Thickness of XLPE Insulation	Thickness of Copper Tape	Thickness of Extruded Bedding	Dia of Armour Wire	Thickness of Outer Sheath	Approx. Overall Diameter	Approx. Cable Weight	Standard Packing Length	Drum Size	Approx. Gross Weight
Sqmm	Ohm/Km	mm	mm	mm	mm	mm	mm	Kg/Km	Metre±10%		KG
35	0.524	4.5	0.075	1.4	2.5	2.7	57.4	5320	500	D-22	3130
50	0.387	4.5	0.075	1.5	2.5	2.8	60.2	5980	500	D-22	3460
70	0.268	4.5	0.075	1.5	2.5	2.9	63.8	6940	500	D-23	3870
95	0.193	4.5	0.075	1.6	2.5	3.0	68.3	8170	500	D-23	4590
120	0.153	4.5	0.075	1.7	2.5	3.1	72.0	9270	500	D-23	5140
150	0.124	4.5	0.075	1.7	2.5	3.2	75.2	10410	500	D-23	5710
185	0.0991	4.5	0.075	1.8	3.15	3.4	80.5	12630	500	D-23	6820
240	0.0754	4.5	0.075	1.9	3.15	3.6	86.5	14930	500	D-25-S	8220
300	0.0601	4.5	0.075	2.0	3.15	3.7	91.3	17230	500	D-25-S	9370
400	0.0470	4.5	0.075	2.1	3.15	4.0	98.3	20580	400	D-25-S	8980

All conductors circular compacted.
Cables conform to IEC 60502 - 2.

MEDIUM VOLTAGE CABLES

- 8.7 / 15 KV - THREE CORE
  (HIGHEST SYSTEM VOLTAGE - 17.5 KV)

  ALUMINIUM CONDUCTOR XLPE INSULATED
  COPPER TAPE SCREENED
  STEEL WIRE ARMOURED
  PVC SHEATHED CABLES

  (AL / SC / XLPE / SC / CUT / PVC / SWA / PVC)

Nominal Area of Conductor	Maximum Conductor Resistance at 20°C	Thickness of XLPE Insulation	Thickness of Copper Tape	Thickness of Extruded Bedding	Dia of Armour Wire	Thickness of Outer Sheath	Approx. Overall Diameter	Approx. Cable Weight	Standard Packing Length	Drum Size	Approx. Gross Weight
Sqmm	Ohm/Km	mm	mm	mm	mm	mm	mm	Kg/Km	Metre±10%		KG
35	0.868	4.5	0.075	1.4	2.5	2.7	57.4	4710	500	D-19	2680
50	0.641	4.5	0.075	1.5	2.5	2.8	60.2	5130	500	D-22	3040
70	0.443	4.5	0.075	1.5	2.5	2.9	64.2	5740	500	D-23	3370
95	0.320	4.5	0.075	1.6	2.5	3.0	68.5	6460	500	D-23	3730
120	0.253	4.5	0.075	1.7	2.5	3.1	72.0	7100	500	D-23	4050
150	0.206	4.5	0.075	1.7	2.5	3.2	75.2	7680	500	D-23	4340
185	0.164	4.5	0.075	1.8	3.15	3.4	80.8	9370	500	D-23	5190
240	0.125	4.5	0.075	1.9	3.15	3.6	86.8	10580	500	D-25-S	6040
300	0.100	4.5	0.075	2.0	3.15	3.7	91.3	11720	500	D-25-S	2930
400	0.0778	4.5	0.075	2.1	3.15	4.0	98.8	13490	400	D-25-S	6150

All conductors circular compacted.
Cables conform to IEC 60502 - 2.

- 12.7 / 22 KV - SINGLE CORE
  (HIGHEST SYSTEM VOLTAGE - 24 KV)

  COPPER CONDUCTOR XLPE INSULATED
  COPPER TAPE SCREENED
  PVC SHEATHED CABLES

  (CU / SC / XLPE / SC / CUT / PVC)

Nominal Area of Conductor	Maximum Conductor Resistance at 20°C	Thickness of XLPE Insulation	Thickness of Copper Tape	Thickness of Outer Sheath	Approx. Overall Diameter	Approx. Cable Weight	Standard Packing Length	Drum Size	Approx. Gross Weight
Sqmm	Ohm/Km	mm	mm	mm	mm	Kg/Km	Metre±10%		KG
35	0.524	5.5	0.075	1.8	25.7	920	500	D-12	570
50	0.387	5.5	0.075	1.8	26.8	1070	500	D-12	645
70	0.268	5.5	0.075	1.8	28.4	1310	500	D-12	765
95	0.193	5.5	0.075	1.9	30.5	1630	500	D-14	965
120	0.153	5.5	0.075	1.9	32.0	1900	500	D-14	1100
150	0.124	5.5	0.075	2.0	33.6	2240	500	D-16	1330
185	0.0991	5.5	0.075	2.0	35.2	2600	500	D-18	1540
240	0.0754	5.5	0.075	2.1	37.9	3200	500	D-18	1840
300	0.0601	5.5	0.075	2.2	40.1	3850	500	D-18	2170
400	0.0470	5.5	0.075	2.3	43.2	4770	500	D-18	2630
500	0.0366	5.5	0.075	2.4	46.4	5830	500	D-19	3240
630	0.0283	5.5	0.075	2.5	50.4	7220	500	D-19	3930

All conductors circular compacted.
Equivalent voltage designation as per IEC 60502 - 2 : 12/20 KV.
Cables conform to IEC 60502 - 2.

MEDIUM VOLTAGE CABLES

- 12.7 / 22 KV - THREE CORE
  (HIGHEST SYSTEM VOLTAGE - 24 KV)

  COPPER CONDUCTOR XLPE INSULATED
  COPPER TAPE SCREENED
  PVC SHEATHED CABLES

  (CU / SC / XLPE / SC / CUT / PVC)

Nominal Area of Conductor	Maximum Conductor Resistance at 20°C	Thickness of XLPE Insulation	Thickness of Copper Tape	Thickness of Outer Sheath	Approx. Overall Diameter	Approx. Cable Weight	Standard Packing Length	Drum Size	Approx. Gross Weight
Sqmm	Ohm/Km	mm	mm	mm	mm	Kg/Km	Metre±10%		KG
35	0.524	5.5	0.075	2.6	53.9	3100	500	D-19	1870
50	0.387	5.5	0.075	2.7	56.5	3610	500	D-21	2130
70	0.268	5.5	0.075	2.8	60.1	4410	500	D-22	2630
95	0.193	5.5	0.075	2.9	64.4	5400	500	D-23	3170
120	0.153	5.5	0.075	3.0	67.9	6300	500	D-23	3650
150	0.124	5.5	0.075	3.1	71.1	7320	500	D-23	4160
185	0.0991	5.5	0.075	3.3	75.0	8540	500	D-23	4770
240	0.0754	5.5	0.075	3.4	80.6	10440	250	D-23	3110
300	0.0601	5.5	0.075	3.6	85.3	12450	250	D-23	3610
400	0.0470	5.5	0.075	3.8	91.9	15370	200	D-23	3570

All conductors circular compacted.
Equivalent voltage designation as per IEC 60502 - 2 : 12/20 KV.
Cables conform to IEC : 60502 - 2.

- 12.7 / 22 KV - THREE CORE
  (HIGHEST SYSTEM VOLTAGE - 24 KV)

  COPPER CONDUCTOR XLPE INSULATED
  COPPER TAPE SCREENED
  STEEL WIRE ARMOURED
  PVC SHEATHED CABLES

  (CU / SC / XLPE / SC / CUT / PVC / SWA / PVC)

Nominal Area of Conductor	Maximum Conductor Resistance at 20°C	Thickness of XLPE Insulation	Thickness of Copper Tape	Thickness of Extruded Bedding	Dia of Armour Wire	Thickness of Outer Sheath	Approx. Overall Diameter	Approx. Cable Weight	Standard Packing Length	Drum Size	Approx. Gross Weight
Sqmm	Ohm/Km	mm	mm	mm	mm	mm	mm	Kg/Km	Metre±10%		KG
35	0.524	5.5	0.075	1.5	2.5	2.8	62.1	5920	500	D-23	3460
50	0.387	5.5	0.075	1.6	2.5	2.9	64.9	6600	500	D-23	3800
70	0.268	5.5	0.075	1.6	2.5	3.1	68.7	7610	500	D-23	4310
95	0.193	5.5	0.075	1.7	2.5	3.2	73.2	8870	500	D-23	4940
120	0.153	5.5	0.075	1.7	3.15	3.3	78.0	10730	250	D-21	3100
150	0.124	5.5	0.075	1.8	3.15	3.4	81.4	12000	250	D-23	3500
185	0.0991	5.5	0.075	1.9	3.15	3.6	85.5	13460	200	D-22	3160
240	0.0754	5.5	0.075	2.0	3.15	3.7	91.3	15780	200	D-23	3660
300	0.0601	5.5	0.075	2.0	3.15	3.9	96.0	18110	200	D-24	4220
400	0.0470	5.5	0.075	2.2	3.15	4.1	103.0	21500	200	D-24	4900

All conductors circular compacted.
Equivalent voltage designation as per IEC 60502 - 2 : 12/20 KV.
Cables conform to IEC : 60502 - 2.

MEDIUM VOLTAGE CABLES

- 12.7 / 22 KV - THREE CORE
  (HIGHEST SYSTEM VOLTAGE- 24 KV)

  ALUMINIUM CONDUCTOR XLPE INSULATED
  COPPER TAPE SCREENED
  STEEL WIRE ARMOURED
  PVC SHEATHED CABLES

  (AL / SC / XLPE / SC / CUT / PVC / SWA / PVC)

Nominal Area of Conductor	Maximum Conductor Resistance at 20°C	Thickness of XLPE Insulation	Thickness of Copper Tape	Thickness of Extruded Bedding	Dia of Armour Wire	Thickness of Outer Sheath	Approx. Overall Diameter	Approx. Cable Weight	Standard Packing Length	Drum Size	Approx. Gross Weight
Sqmm	Ohm/Km	mm	mm	mm	mm	mm	mm	Kg/Km	Metre±10%		KG
35	0.868	5.5	0.075	1.5	2.5	2.8	62.1	5300	500	D-23	3150
50	0.641	5.5	0.075	1.6	2.5	2.9	64.9	5740	500	D-23	3370
70	0.443	5.5	0.075	1.6	2.5	3.1	69.2	6400	500	D-23	3710
95	0.320	5.5	0.075	1.7	2.5	3.2	73.5	7170	500	D-23	4090
120	0.253	5.5	0.075	1.7	3.15	3.3	78.0	8550	250	D-21	2560
150	0.206	5.5	0.075	1.8	3.15	3.4	81.4	9260	250	D-23	2820
185	0.164	5.5	0.075	1.9	3.15	3.6	85.7	10130	200	D-22	2500
240	0.125	5.5	0.075	2.0	3.15	3.7	91.5	11420	200	D-23	2780
300	0.100	5.5	0.075	2.0	3.15	3.9	96.0	12590	200	D-23	3020
400	0.0778	5.5	0.075	2.2	3.15	4.1	103.5	14410	200	D-23	3380

All conductors circular compacted.
Equivalent voltage designation as per IEC 60502 - 2 : 12/20 KV.
Cables conform to IEC 60502 - 2.

- 19 / 33 KV - SINGLE CORE
  (HIGHEST SYSTEM VOLTAGE - 36 KV)

  COPPER CONDUCTOR XLPE INSULATED
  COPPER TAPE SCREENED
  ALUMINIUM WIRE ARMOURED
  PVC SHEATHED CABLES

  (CU / SC / XLPE / SC / CUT / PVC / AWA / PVC)

Nominal Area of Conductor	Maximum Conductor Resistance at 20°C	Thickness of XLPE Insulation	Thickness of Copper Tape	Thickness of Extruded Bedding	Dia of Armour Wire	Thickness of Outer Sheath	Approx. Overall Diameter	Approx. Cable Weight	Standard Packing Length	Drum Size	Approx. Gross Weight
Sqmm	Ohm/Km	mm	mm	mm	mm	mm	mm	Kg/Km	Metre±10%		KG
50	0.387	8.0	0.075	1.2	2.0	2.2	39.4	2050	500	D-18	1270
70	0.268	8.0	0.075	1.2	2.0	2.2	41.0	2330	500	D-18	1410
95	0.193	8.0	0.075	1.2	2.0	2.3	43.1	2710	500	D-18	1600
120	0.153	8.0	0.075	1.2	2.0	2.3	44.6	3020	500	D-18	1750
150	0.124	8.0	0.075	1.3	2.5	2.4	47.4	3570	500	D-19	2110
185	0.0991	8.0	0.075	1.3	2.5	2.5	49.2	3990	500	D-19	2320
240	0.0754	8.0	0.075	1.3	2.5	2.5	51.7	4670	500	D-19	2660
300	0.0601	8.0	0.075	1.4	2.5	2.6	54.1	5410	500	D-21	3130
400	0.0470	8.0	0.075	1.4	2.5	2.7	57.2	6430	500	D-22	3690
500	0.0366	8.0	0.075	1.5	2.5	2.8	60.6	7620	500	D-22	4280
630	0.0283	8.0	0.075	1.6	2.5	2.9	64.8	8935	500	D-21M	4890

All conductors circular compacted.
Equivalent voltage designation as per IEC 60502 - 2 : 18/30 KV.
Cables conform to IEC 60502 - 2.

MEDIUM VOLTAGE CABLES

- 19 / 33 KV - THREE CORE
  (HIGHEST SYSTEM VOLTAGE - 36 KV)

  COPPER CONDUCTOR XLPE INSULATED
  COPPER TAPE SCREENED
  STEEL WIRE ARMOURED
  PVC SHEATHED CABLES

  (CU / SC / XLPE / SC / CUT / PVC / SWA / PVC)

Nominal Area of Conductor	Maximum Conductor Resistance at 20°C	Thickness of XLPE Insulation	Thickness of Copper Tape	Thickness of Extruded Bedding	Dia of Armour Wire	Thickness of Outer Sheath	Approx. Overall Diameter	Approx Cable Weight	Standard Packing Length	Drum Size	Approx. Gross Weight
Sqmm	Ohm/Km	mm	mm	mm	mm	mm	mm	Kg/Km	Metre±10%		KG
50	0.387	8.0	0.075	1.8	3.15	3.4	78.8	9230	500	D-23	5120
70	0.268	8.0	0.075	1.8	3.15	3.5	82.5	10310	500	D-24	5760
95	0.193	8.0	0.075	1.9	3.15	3.6	87.0	11640	500	D-25-S	6570
120	0.153	8.0	0.075	2.0	3.15	3.7	90.6	12850	250	D-23	3710
150	0.124	8.0	0.075	2.0	3.15	3.8	93.8	14150	250	D-23	4040
185	0.0991	8.0	0.075	2.1	3.15	4.0	97.9	15700	250	D-23	4430
240	0.0754	8.0	0.075	2.2	3.15	4.1	104.0	18120	250	D-25	5280
300	0.0601	8.0	0.075	2.3	3.15	4.3	109.0	20570	200	D-25	4860

All conductors circular compacted.
Equivalent voltage designation as per IEC 60502 - 2 : 18/30 KV.
Cables conform to IEC 60502 - 2.

- 19 / 33 KV - THREE CORE
  (HIGHEST SYSTEM VOLTAGE - 36 KV)

  ALUMINIUM CONDUCTOR XLPE INSULATED
  COPPER TAPE SCREENED
  STEEL WIRE ARMOURED
  PVC SHEATHED CABLES

  (AL / SC / XLPE / SC / CUT / PVC / SWA / PVC)

Nominal Area of Conductor	Maximum Conductor Resistance at 20°C	Thickness of XLPE Insulation	Thickness of Copper Tape	Thickness of Extruded Bedding	Dia of Armour Wire	Thickness of Outer Sheath	Approx. Overall Diameter	Approx Cable Weight	Standard Packing Length	Drum Size	Approx. Gross Weight
Sqmm	Ohm/Km	mm	mm	mm	mm	mm	mm	Kg/Km	Metre±10%		KG
50	0.641	8.0	0.075	1.8	3.15	3.4	78.8	8380	500	D-23	4690
70	0.443	8.0	0.075	1.8	3.15	3.5	82.9	9120	500	D-24	5160
95	0.320	8.0	0.075	1.9	3.15	3.6	87.2	10000	500	D-25-S	5750
120	0.253	8.0	0.075	2.0	3.15	3.7	90.6	10680	250	D-23	3170
150	0.206	8.0	0.075	2.0	3.15	3.8	93.8	11410	250	D-23	3350
185	0.164	8.0	0.075	2.1	3.15	4.0	98.1	12370	250	D-23	3590
240	0.125	8.0	0.075	2.2	3.15	4.1	104.0	13760	250	D-25	4190
300	0.100	8.0	0.075	2.3	3.15	4.3	109.0	15060	200	D-25	3760

All conductors circular compacted.
Equivalent voltage designation as per IEC 60502 - 2 : 18/30 KV.
Cables conform to IEC 60502 - 2.

PILOT CABLE

COPPER CONDUCTOR PE INSULATED
STEEL WIRE ARMOURED PVC SHEATHED CABLES

Total Number of Cores	To withstand Max. Induced Voltage Level	CONDUCTOR							Thickness of Insulation (Min.)	Thickness of Screening Tape	Thickness of PE Bedding	Thickness of PE Inner Sheath	Diameter of Armour Wire	Thickness of Outer Sheath (Min.)	Approx. Overall Diameter	Approx. Cable Weight	Standard Packing Length	Drum Size	Approx. Gross Weight
		Nominal Area of Conductor	Number of Cores	Maximum Resistance at 20ºC	Screened Pair		Unscreened Pair												
					Number of Pairs	Nominal Diameter of Wires	Number of Pairs	Nominal Diameter of Wires											
No.	KV	Sqmm	No.	Ohm/km	No.	mm	No.	mm	mm	mm	mm	mm	mm	mm	mm	Kg/Km	Metre ±10%		Kg
16	5	2.5 & 0.635	6 10	7.41 28.48	1 2	1.78 0.90	2 3	1.78 0.90	0.5	0.09	-	1.0	1.25	1.7	24.0	930	1000	D-14	1050
34	15	2.5 & 0.635	6 28	7.41 28.48	3 -	1.78 -	- 14	- 0.90	0.8	0.075	1.8	1.0	2.0	1.9	0.44	2900	750	D-22	2640

All conductors circular solid (Class 1).
In 16 core Pilot Cable polyester laminated aluminium screen is provided over pairs for Solkor protection and Telephone System.
In 34 core Pilot Cable individual pairs for Solkor protection system and intertripping and interlocking system are screened with plain copper tape. Also an overall screen of plain copper tape is provided over PE bedding.
Cables conform to MEW Kuwait and ESI 09-6 specification.

A.C. RESISTANCE, REACTANCE AND CAPACITANCE VALUES

3.8/6.6 KV CABLES

Conductor size Sq.mm	* Single Core Cables					3-Core Cables			
	A.C. Resistance at 90°C		Reactance (50 Hz)		Capacitance (μF/km)	A.C. Resistance at 90°C		Reactance (50 Hz) (Ω/km)	Capacitance (μF/km)
	Copper (Ω/km)	Aluminium (Ω/km)	Trefoil (Ω/km)	Flat* (Ω/km)		Copper (Ω/km)	Aluminium (Ω/km)		
35	0.668	1.11	0.140	0.198	0.29	0.668	1.11	0.108	0.30
50	0.494	0.822	0.131	0.189	0.33	0.494	0.822	0.103	0.33
70	0.342	0.568	0.123	0.181	0.37	0.342	0.568	0.098	0.38
95	0.247	0.411	0.117	0.175	0.42	0.247	0.411	0.094	0.43
120	0.196	0.325	0.112	0.170	0.47	0.196	0.325	0.090	0.48
150	0.159	0.265	0.109	0.167	0.51	0.159	0.265	0.088	0.52
185	0.127	0.211	0.107	0.165	0.55	0.127	0.211	0.086	0.56
240	0.0974	0.161	0.103	0.161	0.60	0.0971	0.162	0.083	0.61
300	0.0782	0.129	0.101	0.159	0.61	0.0778	0.130	0.082	0.62
400	0.0621	0.101	0.097	0.156	0.64	0.0614	0.102	0.080	0.65
500	0.0495	0.0792	0.097	0.155	0.67	-	-	-	-
630	0.0398	0.0623	0.094	0.152	0.75	-	-	-	-

*Twice Cable diameter spacing between centers.

A.C. RESISTANCE, REACTANCE AND CAPACITANCE VALUES

6.35/11 KV CABLES

Conductor size Sq.mm	* Single Core Cables					3-Core Cables			
	A.C. Resistance at 90°C		Reactance (50 Hz)		Capacitance (μF/km)	A.C. Resistance at 90°C		Reactance (50 Hz) (Ω/km)	Capacitance (μF/km)
	Copper (Ω/km)	Aluminium (Ω/km)	Trefoil (Ω/km)	Flat* (Ω/km)		Copper (Ω/km)	Aluminium (Ω/km)		
35	0.668	1.11	0.142	0.20	0.23	0.668	1.11	0.116	0.24
50	0.494	0.822	0.135	0.194	0.26	0.494	0.822	0.111	0.26
70	0.342	0.568	0.128	0.186	0.29	0.342	0.568	0.105	0.29
95	0.247	0.411	0.121	0.179	0.33	0.247	0.411	0.100	0.34
120	0.196	0.325	0.116	0.174	0.36	0.196	0.325	0.097	0.37
150	0.159	0.265	0.114	0.173	0.39	0.159	0.265	0.093	0.40
185	0.127	0.211	0.111	0.169	0.42	0.128	0.211	0.091	0.43
240	0.0973	0.161	0.106	0.164	0.47	0.0970	0.161	0.087	0.48
300	0.0782	0.129	0.102	0.161	0.51	0.0778	0.129	0.085	0.52
400	0.0620	0.101	0.099	0.157	0.57	0.0614	0.101	0.082	0.59
500	0.0494	0.0792	0.098	0.156	0.63	-	-	-	-
630	0.0396	0.0623	0.094	0.152	0.71	-	-	-	-

*Twice Cable diameter spacing between centers.

A.C. RESISTANCE, REACTANCE AND CAPACITANCE VALUES

8.7/15 KV CABLES

Conductor size Sq.mm	* Single Core Cables					3-Core Cables			
	A.C. Resistance at 90°C		Reactance (50 Hz)		Capacitance (μF/km)	A.C. Resistance at 90°C		Reactance (50 Hz) (Ω/km)	Capacitance (μF/km)
	Copper (Ω/km)	Aluminium (Ω/km)	Trefoil (Ω/km)	Flat* (Ω/km)		Copper (Ω/km)	Aluminium (Ω/km)		
35	0.668	1.11	0.147	0.206	0.19	0.668	1.11	0.124	0.19
50	0.494	0.822	0.141	0.199	0.21	0.494	0.822	0.119	0.21
70	0.342	0.568	0.133	0.191	0.23	0.342	0.568	0.112	0.24
95	0.247	0.411	0.128	0.185	0.26	0.247	0.411	0.106	0.27
120	0.196	0.325	0.122	0.180	0.29	0.196	0.325	0.102	0.29
150	0.159	0.265	0.118	0.176	0.31	0.159	0.265	0.099	0.31
185	0.127	0.211	0.115	0.173	0.33	0.127	0.211	0.096	0.34
240	0.0973	0.161	0.109	0.167	0.37	0.0970	0.161	0.092	0.38
300	0.0780	0.129	0.106	0.164	0.40	0.0778	0.129	0.090	0.41
400	0.0619	0.101	0.104	0.162	0.45	0.0614	0.101	0.086	0.46
500	0.0493	0.0792	0.101	0.159	0.50	-	-	-	-
630	0.0395	0.0622	0.097	0.155	0.55	-	-	-	-

*Twice Cable diameter spacing between centers.

A.C. RESISTANCE, REACTANCE AND CAPACITANCE VALUES

12.7/22 KV CABLES

Conductor size Sq.mm	* Single Core Cables					3-Core Cables			
	A.C. Resistance at 90°C		Reactance (50 Hz)		Capacitance (µF/km)	A.C. Resistance at 90°C		Reactance (50 Hz) (Ω/km)	Capacitance (µF/km)
	Copper (Ω/km)	Aluminium (Ω/km)	Trefoil (Ω/km)	Flat* (Ω/km)		Copper (Ω/km)	Aluminium (Ω/km)		
35	0.668	1.11	0.138	0.196	-	0.668	1.11	0.131	0.17
50	0.494	0.822	0.132	0.190	0.19	0.494	0.822	0.125	0.18
70	0.342	0.568	0.125	0.183	0.22	0.342	0.568	0.118	0.20
95	0.247	0.411	0.118	0.176	0.24	0.247	0.411	0.112	0.23
120	0.196	0.325	0.113	0.171	0.26	0.196	0.325	0.107	0.25
150	0.159	0.265	0.110	0.168	0.28	0.159	0.265	0.104	0.27
185	0.127	0.211	0.107	0.164	0.30	0.127	0.211	0.101	0.29
240	0.0974	0.161	0.102	0.160	0.34	0.0970	0.161	0.096	0.32
300	0.0782	0.129	0.099	0.157	0.37	0.0778	0.129	0.093	0.35
400	0.0621	0.101	0.096	0.154	0.40	0.0614	0.101	0.090	0.39
500	0.0495	0.0791	0.093	0.151	0.44	-	-	-	-
630	0.0398	0.0621	0.090	0.148	0.49	-	-	-	-

*Twice Cable diameter spacing between centers.

A.C. RESISTANCE, REACTANCE AND CAPACITANCE VALUES

19/33 KV CABLES

Conductor size Sq.mm	* Single Core Cables					3-Core Cables			
	A.C. Resistance at 90°C		Reactance (50 Hz)		Capacitance (μF/km)	A.C. Resistance at 90°C		Reactance (50 Hz) (Ω/km)	Capacitance (μF/km)
	Copper (Ω/km)	Aluminium (Ω/km)	Trefoil (Ω/km)	Flat* (Ω/km)		Copper (Ω/km)	Aluminium (Ω/km)		
50	0.494	0.822	0.157	0.215	0.14	0.494	0.817	0.138	0.14
70	0.342	0.568	0.148	0.206	0.15	0.342	0.568	0.130	0.16
95	0.247	0.411	0.140	0.198	0.17	0.246	0.411	0.123	0.18
120	0.196	0.325	0.134	0.192	0.19	0.196	0.325	0.118	0.19
150	0.159	0.265	0.132	0.190	0.20	0.159	0.264	0.114	0.20
185	0.127	0.211	0.128	0.186	0.21	0.127	0.211	0.110	0.22
240	0.0972	0.161	0.121	0.179	0.24	0.0970	0.161	0.105	0.24
300	0.0780	0.129	0.118	0.176	0.25	0.0777	0.129	0.102	0.26
400	0.0617	0.101	0.113	0.172	0.28	-	-	-	-
500	0.0491	0.0793	0.110	0.168	0.31	-	-	-	-

*Twice Cable diameter spacing between centers.

CURRENT RATINGS (AC)

Single core cables 3.6/6.0 KV TO 18/30 kV
Copper or Aluminium conductors,
XLPE insulated Armoured Cables

Nominal Area of Conductor	In Air		In Ground		In Duct	
	Single core in Trefoil		Single core in Trefoil		Laid Singly	
	Copper	Aluminium	Copper	Aluminium	Copper	Aluminium
Sqmm	A		A		A	
50	239	186	212	163	212	163
70	296	230	259	202	249	202
95	359	282	308	241	293	235
120	412	340	346	269	327	265
150	469	364	394	302	361	288
185	526	416	437	341	394	322
240	622	488	500	389	449	365
300	708	555	557	437	481	404
400	804	641	625	490	510	437
500	890	736	683	548	548	481
630	995	842	730	616	596	529

Operating conditions:

Ambient air temperature: 30°C
Ground temperature: 20°C
Depth of laying : 0.8 m
Thermal resistivity of soil: 1.2 K.m/W

Above values can be applied safely for Unarmoured cables also.

CURRENT RATINGS (AC)

Three core cables 3.6/6.0 kV TO 18/30 kV
Copper or Aluminium conductors,
XLPE insulated Armoured Cables

Nominal Area of Conductor	In Air		In Ground		In Duct	
	Laid singly		Laid singly		Laid singly	
	Copper	Aluminium	Copper	Aluminium	Copper	Aluminium
Sqmm	A		A		A	
50	218	162	214	153	184	130
70	263	201	260	188	218	159
95	329	239	306	221	260	192
120	373	282	347	255	295	216
150	428	316	387	288	337	245
185	488	368	438	322	377	279
240	567	431	499	365	433	322
300	647	488	551	418	478	361
400	736	565	611	471	540	414

Operating conditions:

Ambient air temperature: 30°C
Ground temperature: 20°C
Depth of laying : 0.8 m
Thermal resistivity of soil: 1.2 K.m/W

Above values can be applied safely for Unarmoured cables also.

Current Rating Factors

Rating Factors for variation in Ambient temperature for cables laid in Air ONLY

Ambient temperature°C	20	25	30	35	40	45	50	55
XLPE insulated cables	1.08	1.04	1.00	0.96	0.91	0.87	0.82	0.76

Rating Factors for variation in Ground temperature for cables laid Direct in Ground or in Ducts ONLY:

Ground temperature°C	15	20	25	30	35	40	45	50
XLPE insulated cables	1.04	1.00	0.96	0.93	0.89	0.85	0.80	0.76

- Correction Factor for depths of Laying other than 0.8m for Direct buried Cables.

Depth of laying m	Single-core cables Nominal conductor size mm^2		Three-core cables
	≤ 185 mm^2	> 185 mm^2	
0.5	1.04	1.06	1.04
0.6	1.02	1.04	1.03
1	0.98	0.97	0.98
1.25	0.96	0.95	0.96
1.5	0.95	0.93	0.95
1.75	0.94	0.91	0.94
2	0.93	0.90	0.93
2.5	0.91	0.88	0.91
3	0.90	0.86	0.90

- Correction Factor for depths of Laying other than 0.8m for Cables in Ducts.

Depth of laying m	Single-core cables Nominal conductor size mm^2		Three-core cables
	≤ 185 mm^2	> 185 mm^2	
0.5	1.04	1.05	1.03
0.6	1.02	1.03	1.02
1	0.98	0.97	0.99
1.25	0.96	0.95	0.97
1.5	0.95	0.93	0.96
1.75	0.94	0.92	0.95
2	0.93	0.91	0.94
2.5	0.91	0.89	0.93
3	0.90	0.88	0.92

- Cables laid direct in Ground

Rating Factors for variation in Thermal resistivity of Soil (Average Values)

Size of cables sqmm	Soil thermal resistivity in K.m/W						
	0.8	0.9	1.0	1.5	2.0	2.5	3.0
Single core							
50	1.15	1.11	1.07	0.91	0.81	0.73	0.68
70	1.16	1.12	1.07	0.91	0.81	0.73	0.68
95	1.16	1.12	1.07	0.91	0.81	0.73	0.68
120	1.16	1.12	1.07	0.91	0.81	0.73	0.68
150	1.17	1.12	1.07	0.91	0.81	0.73	0.68
185	1.17	1.12	1.07	0.91	0.81	0.73	0.68
240	1.17	1.12	1.07	0.91	0.80	0.73	0.68
300	1.18	1.12	1.07	0.91	0.80	0.73	0.68
400	1.18	1.12	1.07	0.91	0.80	0.73	0.67
500	1.18	1.12	1.07	0.91	0.80	0.73	0.67
630	1.18	1.12	1.07	0.91	0.80	0.73	0.67
Multi core							
50	1.13	1.09	1.06	0.92	0.83	0.76	0.71
70	1.14	1.09	1.06	0.92	0.83	0.75	0.70
95	1.14	1.09	1.06	0.92	0.83	0.75	0.70
120	1.14	1.10	1.06	0.92	0.82	0.75	0.69
150	1.14	1.10	1.06	0.92	0.82	0.75	0.69
185	1.14	1.10	1.06	0.92	0.82	0.74	0.69
240	1.15	1.10	1.07	0.92	0.81	0.74	0.69
300	1.15	1.10	1.07	0.92	0.81	0.74	0.69
400	1.15	1.10	1.07	0.92	0.81	0.74	0.69

Group Rating Factors

Group rating factors for circuits of three single core cables in Trefoil and laid flat touching, horizontal formation (average value)

	Number Of Circuits						
		Spacing of Circuits					
		Touching					
		Trefoil	Laid flat	0.15m*	0.30m	0.45m	0.60m
	2	0.78	0.81	0.81	0.85	0.88	0.90
	3	0.66	0.68	0.71	0.76	0.80	0.83
12/20kV	4	0.59	0.62	0.65	0.72	0.76	0.80
	5	0.55	0.58	0.61	0.68	0.73	0.77
	6	0.52	0.55	0.58	0.66	0.72	0.76
	2	0.79	0.81	0.81	0.85	0.88	0.90
18/30kV	3	0.67	0.70	0.71	0.76	0.80	0.83
	4	0.62	0.65	0.65	0.72	0.76	0.80
	5	0.57	0.60	0.60	0.68	0.73	0.77
	6	0.54	0.57	0.57	0.66	0.72	0.76

*This configuration, at 0.15m spacing, may not be practical for the larger size cables

Group Rating Factor for multicore cables in Horizontal Formation

	Number Of Cables Group	SPACING				
		Spacing				
		Touching	0.15m	0.30m	0.45m	0.60m
3.6/6 to 12/20kV cables	2	0.80	0.85	0.89	0.90	0.92
	3	0.68	0.75	0.80	0.84	0.86
	4	0.62	0.70	0.77	0.80	0.84
	5	0.57	0.66	0.73	0.78	0.81
	6	0.55	0.63	0.71	0.76	0.80
18/30kV cables	2	0.80	0.83	0.87	0.89	0.91
	3	0.70	0.73	0.78	0.82	0.85
	4	0.64	0.68	0.74	0.78	0.82
	5	0.59	0.63	0.70	0.75	0.79
	6	0.56	0.60	0.68	0.74	0.78

- Cables installed in single way ducts

Rating factors for variation in thermal resistivity of Soil (average values)

Size of cables sqmm	Soil thermal resistivity in K.m/W						
	0.8	0.9	1.0	1.5	2.0	2.5	3.0
Single core							
50	1.08	1.06	1.04	0.94	0.87	0.82	0.77
70	1.09	1.06	1.04	0.94	0.87	0.81	0.76
95	1.09	1.06	1.04	0.94	0.87	0.81	0.76
120	1.10	1.07	1.04	0.94	0.86	0.80	0.75
150	1.10	1.07	1.04	0.94	0.86	0.80	0.75
185	1.10	1.07	1.04	0.93	0.86	0.79	0.75
240	1.11	1.07	1.04	0.93	0.86	0.79	0.74
300	1.11	1.08	1.05	0.93	0.85	0.79	0.74
400	1.11	1.08	1.05	0.93	0.85	0.78	0.73
500	1.11	1.08	1.05	0.93	0.85	0.78	0.73
630	1.12	1.08	1.05	0.93	0.84	0.78	0.72
Mulicore							
50	1.05	1.03	1.02	0.96	0.91	0.87	0.83
70	1.05	1.04	1.02	0.96	0.91	0.86	0.82
95	1.06	1.04	1.02	0.96	0.91	0.86	0.82
120	1.06	1.04	1.03	0.95	0.90	0.85	0.81
150	1.06	1.04	1.03	0.95	0.90	0.85	0.80
185	1.07	1.05	1.03	0.95	0.89	0.84	0.80
240	1.07	1.05	1.03	0.95	0.89	0.84	0.79
300	1.07	1.05	1.03	0.95	0.88	0.83	0.78
400	1.07	1.05	1.03	0.95	0.88	0.83	0.78

Group rating factors

Group rating factors for single core cables in trefoil single way ducts, horizontal formation (average value)

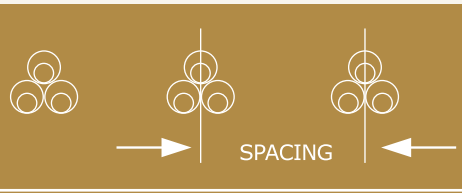

		Spacing		
	Number Of Circuits	Touching	0.45m	0.60m
3.6/6 to 12/20kV cables	2	0.85	0.88	0.90
	3	0.75	0.80	0.83
	4	0.70	0.76	0.80
	5	0.67	0.73	0.77
	6	0.64	0.71	0.76
18/30kV cables	2	0.85	0.88	0.90
	3	0.76	0.80	0.83
	4	0.71	0.76	0.80
	5	0.67	0.73	0.77
	6	0.65	0.71	0.76

- Cables installed in single way ducts

Group rating factors for multicore cables in single way ducts, horizontal formation (average value)

		Spacing			
	Number of Ducts In Ground	Touching	0.30m	0.45m	0.60m
3.6/6 to 12/20kV cables	2	0.88	0.91	0.93	0.94
	3	0.80	0.84	0.87	0.89
	4	0.75	0.81	0.84	0.87
	5	0.71	0.77	0.82	0.85
	6	0.69	0.75	0.80	0.84
18/30kV cables	2	0.87	0.89	0.92	0.93
	3	0.78	0.82	0.85	0.87
	4	0.73	0.78	0.82	0.85
	5	0.69	0.75	0.79	0.83
	6	0.67	0.73	0.78	0.82

Short Circuit curves for Copper Conductor XLPE Insulated Cable

$$Isc = 0.143 \frac{A}{\sqrt{t}}$$

Isc - Short Circuit Current in KA
A - Conductor Area in Sqmm
t - Short Circuit Time in Sec.

Note: Max. Permissible conductor temperature during short circuit = 250°C

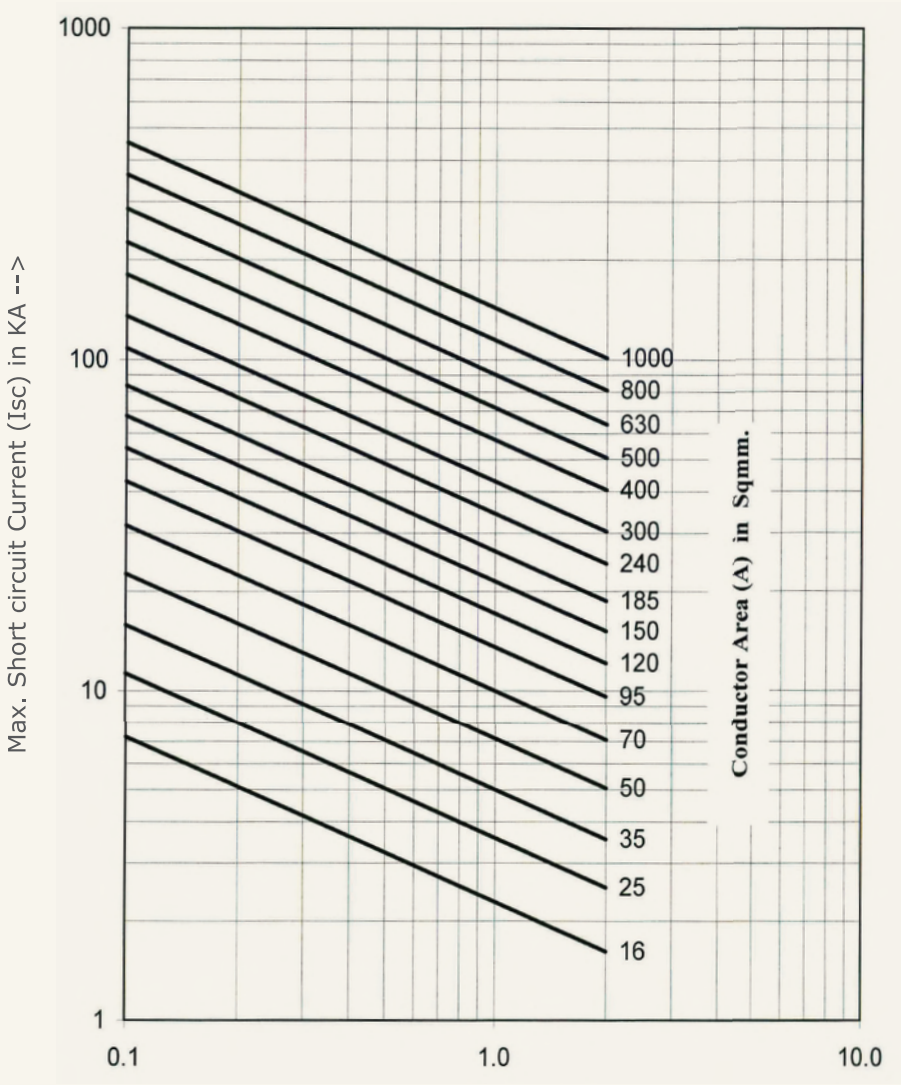

Short Circuit for Aluminium Conductor XLPE Insulated Cable

$$Isc = 0.094 \frac{A}{\sqrt{t}}$$

Isc - Short Circuit Current in KA

A - Conductor Area in Sqmm

t - Short Circuit Time in Sec.

Note: Max. Permissible conductor temperature during short circuit = 250°C

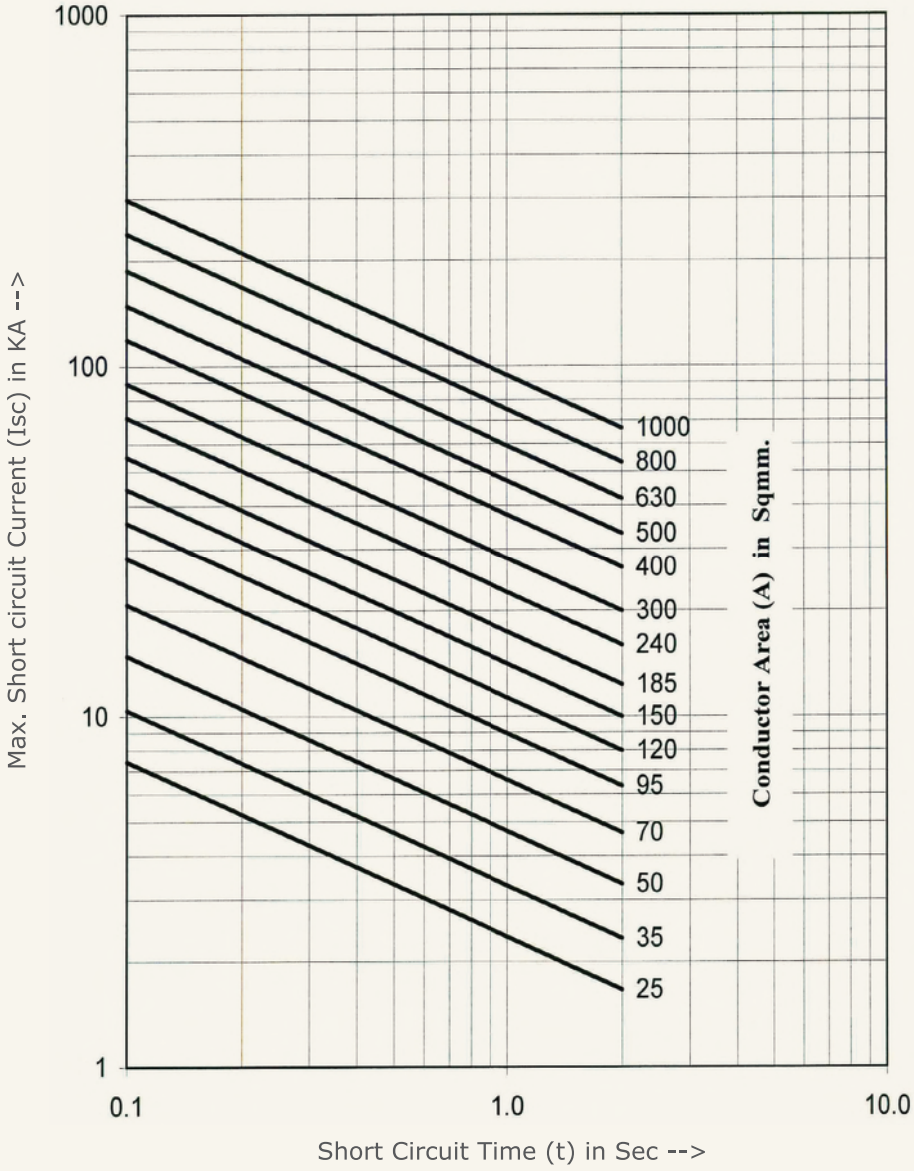

DRUM SIZES AND DIMENSIONS

A- Flange diameter (Excluding Lagging), mm
B- Barrel diameter, mm
C- Overall width, mm
D- Traverse width, mm
E- Minimum spindle hole diameter, mm

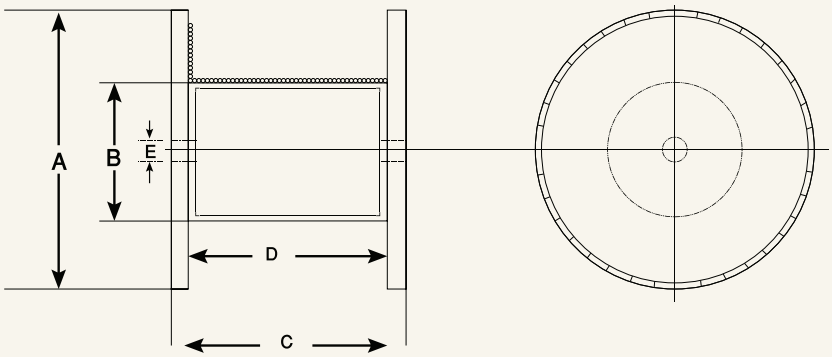

DIMENSIONS

Drum size D-No	A	B	C	D	E
D-6	600	250	470	400	110
D-7	700	325	570	500	110
D-8	800	375	570	500	110
D-9	900	425	620	550	110
D-10	1000	500	690	600	110
D-11	1100	575	740	650	110
D-12	1200	675	950	850	110
D-14	1400	800	950	850	110
D-16	1600	950	970	850	110
D-18	1800	1100	1220	1100	110
D-19	1900	1100	1230	1100	110
D-20	2000	1300	1235	1100	110
D-21	2100	1150	1290	1100	110
D-22	2200	1400	1390	1250	110
D-23	2340	1200	1795	1625	110
D-24	2400	1200	1795	1625	110
D-25-S	2540	1200	1825	1625	110
D-25	2540	1400	1800	1625	110
D-26	2600	1400	1970	1800	110

Drum dimensions in actual deliveries are subject to change without notice.

NOTES